IN

Diagram / Parts List

DUB184

CORDLESS BLOWER

2020/10

(IN) DUB184 / CORDLESS BLOWER

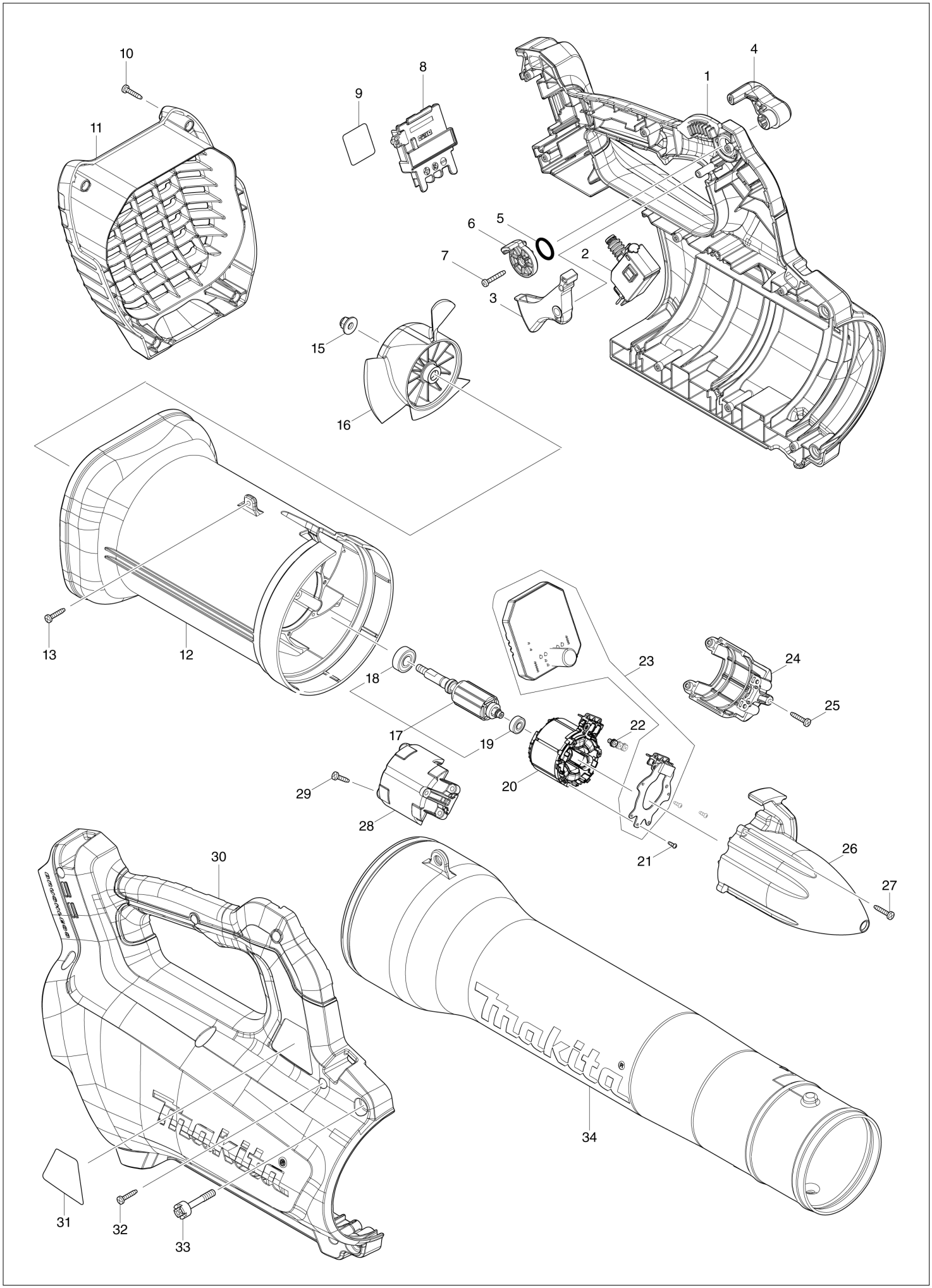

IN	INDIA

DUB184 / CORDLESS BLOWER

Item	Sub	Parts No.	Parts Description	Qty	I/C	E/C No.	Close No.	Remark
001		183M74-5	HOUSING SET	1			D1056	
	C10	263005-3	RUBBER PIN 6	2			D1056	
	C20	806D81-4	CAUTION LABEL	1			D1056	
	D10		INC. 30				D1056	
001-1		183N88-0	HOUSING SET	1	<	D1056		
	C10	263005-3	RUBBER PIN 6	2		D1056		
	C20	806D81-4	CAUTION LABEL	1		D1056		
	D10		INC. 30			D1056		
002		651395-0	SWITCH C3JW-6B-PA6N	1				
003		459696-8	SWITCH LEVER	1				
004		459697-6	CONTROL LEVER	1				
005		213154-6	O RING 14	1				
006		459698-4	LINK	1				
007		266127-8	+ TAPPING SCREW PT 3X20	1				
008		643874-2	TERMINAL	1				
009		856D78-3	DUB184 SERIAL NO. LABEL	1				
010		266130-9	TAPPING SCREW BIND PT 3X16	4				
011		459699-2	REAR COVER	1				
012		459695-0	FAN HOUSING	1				
013		266130-9	TAPPING SCREW BIND PT 3X16	3				
015		252286-4	COLLARED HEX.LOCK NUT M5-8	1				
016		240177-1	FAN 110	1				
017		519580-0	ROTOR ASS'Y	1				
	D10		INC. 18,19					
018		210040-2	BALL BEARING 698LLU	1				
019		211157-4	BALL BEARING 695ZZ	1				
020		629292-8	STATOR	1				
021		266490-9	TAPPING SCREW PT 2X6	3				
022		652069-6	FLAT HEAD SCREW M3X6	3				
023		620B76-9	CONTROLLER	1			D5867	
023-1		620B76-9	CONTROLLER	1	O	D5867		
024		183M64-8	MOTOR HOUSING SET	1				
	D10		INC. 28					
025		266130-9	TAPPING SCREW BIND PT 3X16	2				
026		459700-3	CAP	1				
027		266130-9	TAPPING SCREW BIND PT 3X16	3				
028		183M64-8	MOTOR HOUSING SET	1				
	D10		INC. 24					
029		266130-9	TAPPING SCREW BIND PT 3X16	4				
030		183M74-5	HOUSING SET	1			D1056	
	C10	263005-3	RUBBER PIN 6	2			D1056	
	C20	806D81-4	CAUTION LABEL	1			D1056	
	D10		INC. 1				D1056	
030-1		183N88-0	HOUSING SET	1	<	D1056		
	C10	263005-3	RUBBER PIN 6	2		D1056		
	C20	806D81-4	CAUTION LABEL	1		D1056		
	D10		INC. 1			D1056		
031		856D71-7	DUB184 NAME PLATE	1				
032		266130-9	TAPPING SCREW BIND PT 3X16	9				
033		251570-4	HEX.SOCKET HEAD BOLT M5X30	2				
034		459701-1	FRONT NOZZLE	1			Y08367	
034-1		183P96-3	FRONT NOZZLE SET	1	O	Y08367		
A01		783202-0	HEX. WRENCH 4	1				
A07B		***DC18SD	DC18SD BATTERY CHARGER	1				
	D10		COMPO-PARTS					
A08B		198013-4	BATTERY BL1850B SET	1				

B:DUB184ST(H)

Interchange
O : Yes
X : No
< : the new part can be substituted for the current.
> : the current part can be substituted for the new.
S : Interchangeable as a set.